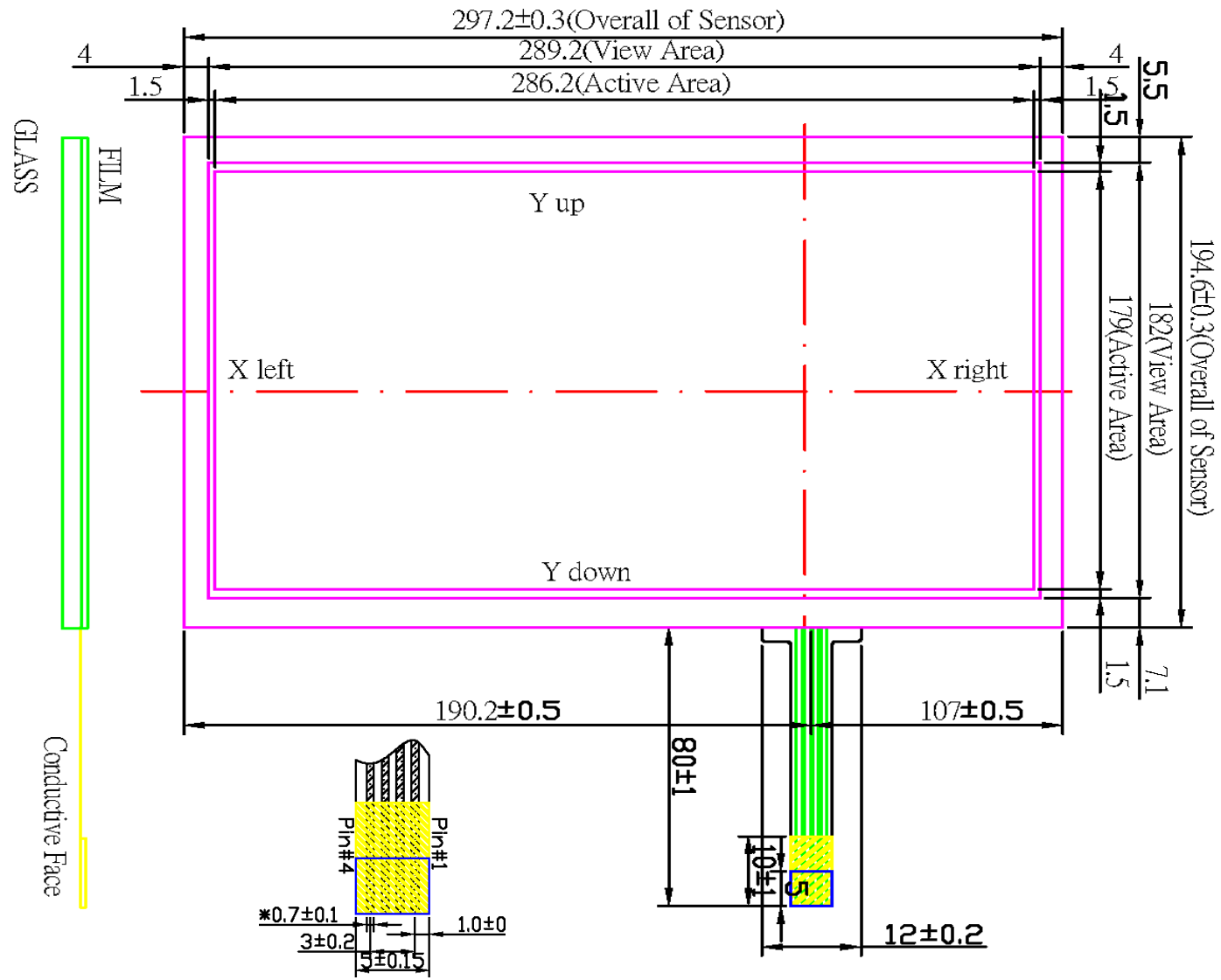

瞄準科技有限公司 AIM TOUCH TECHNOLOGY CO .,LTD.	DATE：2011/12/02	Part Number	ITO Film Type	Glass Type	Glass Thickness	Finished Part Thickness
	MODEL： AIM-4R-1331-O01	AIM-4R-1331-O01-G1N	ANTI GLARE	General	1.1mm	1.5mm±0.2
		AIM-4R-1331-O01-G1SN	ANTI GLARE	chemical strengthen	1.1mm	1.5mm±0.2
		AIM-4R-1331-O01-G2N	ANTI GLARE	General	1.8mm	2.2mm±0.2

NOTE：All indications are the millimeters.